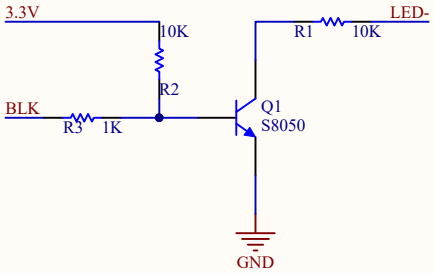

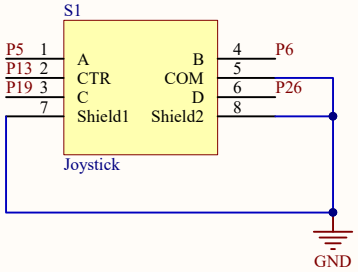

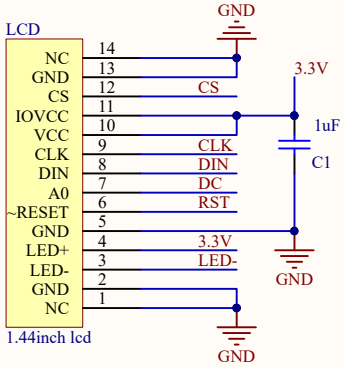

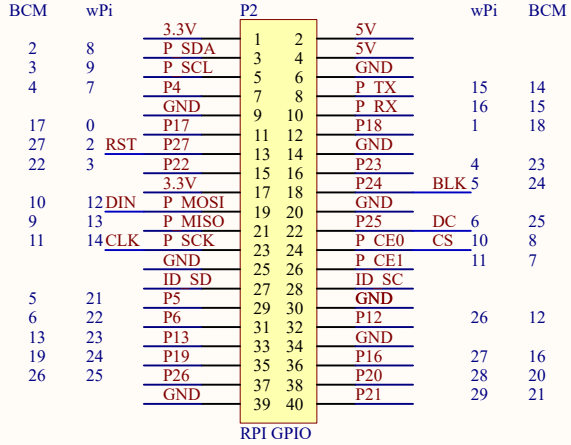

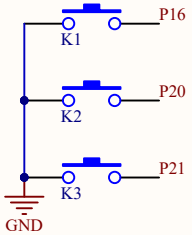

Waveshare

1.44inch LCD